DC-EX 125/5"C

284981 A2-12.2017

1

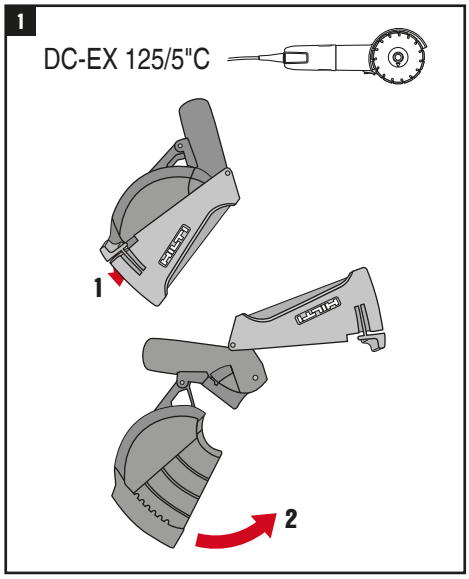

2

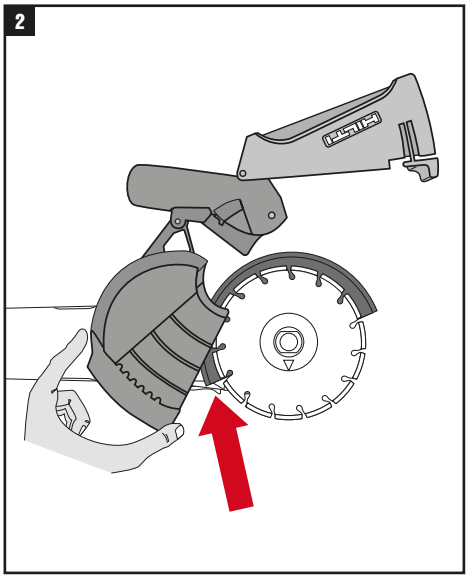

3

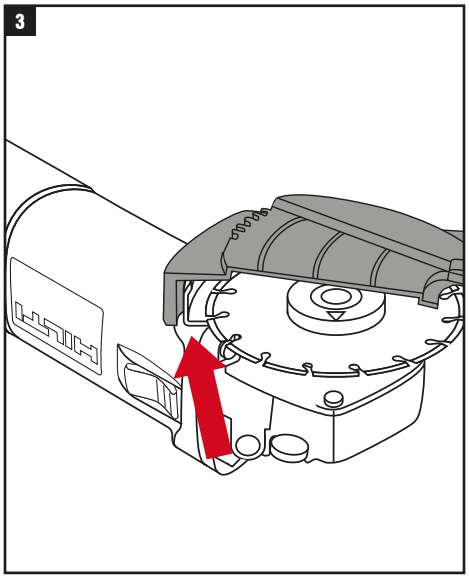

4

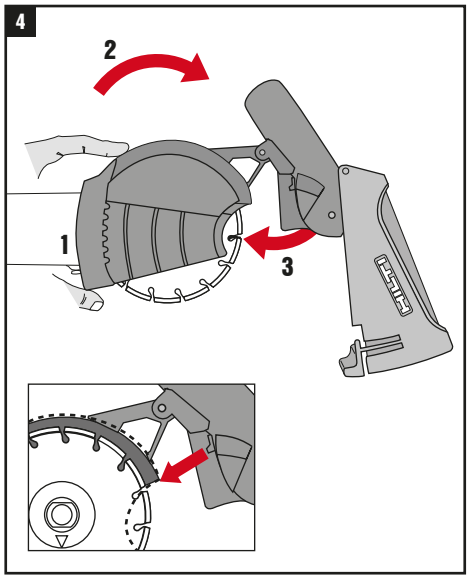

5

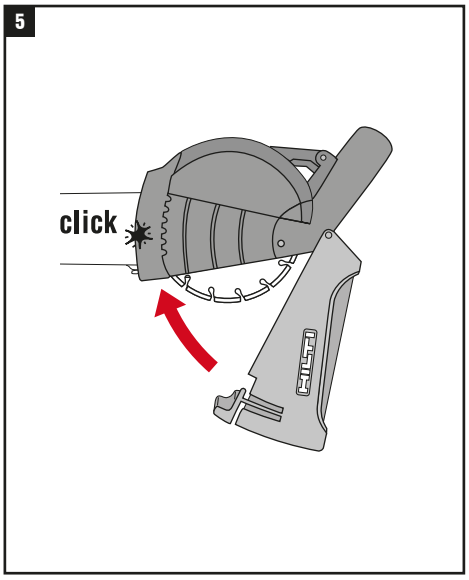

6

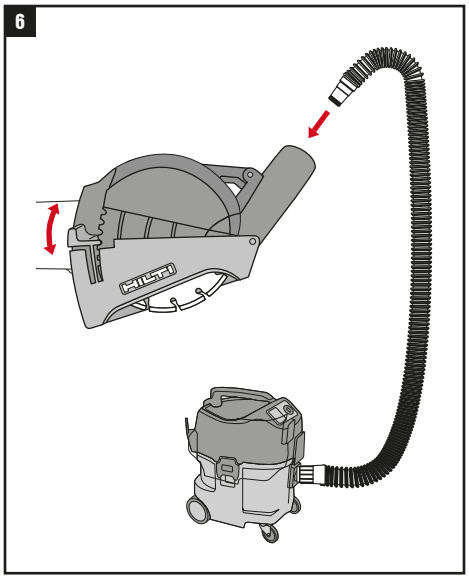

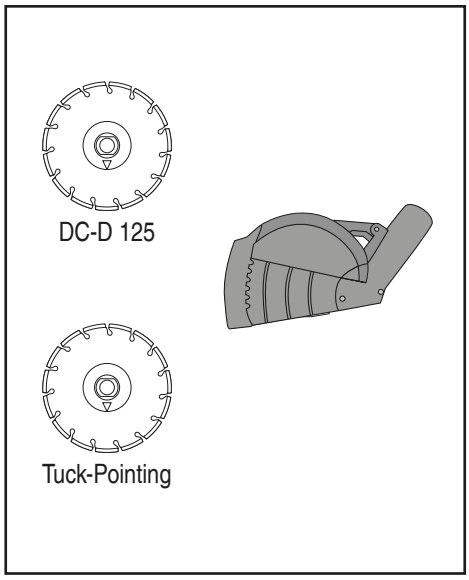

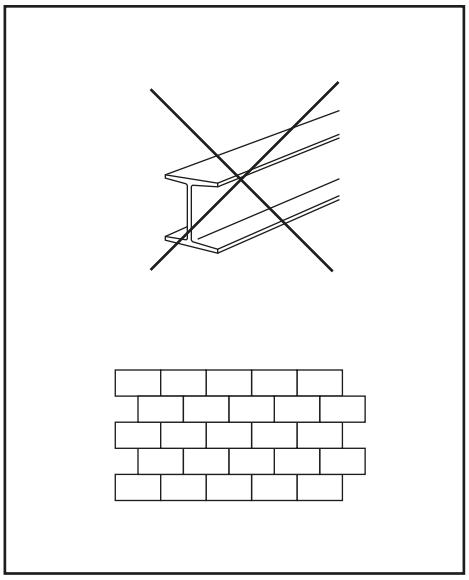

Printed: 15.12.2017 | Doc-Nr: PUB / 5390898 / 000 / 00